TM 9-1750C

WAR DEPARTMENT TECHNICAL MANUAL

ORDNANCE MAINTENANCE

AMERICAN BOSCH MAGNETOS

MJT7A302, MJT9A304, and MJT9A306

WAR DEPARTMENT *MAY 1944*

WAR DEPARTMENT TECHNICAL MANUAL

TM 9-1750C

ORDNANCE MAINTENANCE

AMERICAN BOSCH MAGNETOS

MJT7A302, MJT9A304, and MJT9A306

WAR DEPARTMENT

May 1944

WAR DEPARTMENT
Washington 25, D.C., 19 May 1944

TM 9-1750C, Ordnance Maintenance, American Bosch Magnetos, MJT7A302, MJT9A304, and MJT9A306, is published for the information and guidance of all concerned.

[A.G. 300.7 (28 Dec 43)]

BY ORDER OF THE SECRETARY OF WAR:

G. C. MARSHALL,
Chief of Staff.

OFFICIAL:

J. A. ULIO,
Major General,
The Adjutant General.

DISTRIBUTION: C and H 9 (2); R and L 5 (2).

(For explanation of symbols, see FM 21-6.)

CONTENTS

ORDNANCE MAINTENANCE—AMERICAN BOSCH MAGNETOS MJT7A302, MJT9A304, AND MJT9A306

CHAPTER 1

INTRODUCTION

1. SCOPE.

a. The instructions contained in this manual are for the information and guidance of personnel charged with the maintenance and repair of Bosch magneto electrical equipment. These instructions are supplementary to field and technical manuals prepared for the using arms. This manual does not contain information which is intended primarily for the using arms, since such information is available to ordnance maintenance personnel in 100-series TM's or FM's.

2. CONTENTS AND ARRANGEMENT OF MANUAL.

a. The chapters in this manual deal with the three Bosch magnetos within each chapter as the occasion requires, containing detailed instructions for inspection, disassembly, assembly, maintenance, and repair of the above-named units. Thus chapter 2 covers a description of all three types. Chapter 3 covers trouble shooting, service, and removal from engine; chapter 4 covers disassembly, repair, assembly and test; chapter 5 covers installation and tolerances and chapter 6 is devoted to special tools and equipment. The contents of each paragraph or subparagraph applies alike to the three models, MJT7A302, MJT9A304, and MJT9A306, unless designated otherwise.

3. MWO AND MAJOR UNIT ASSEMBLY REPLACEMENT RECORD.

a. Description. Every vehicle is supplied with a copy of A.G.O. Form No. 478 which provides a means of keeping a record of each MWO completed or major unit assembly replaced. This form includes spaces for the vehicle name and U. S. A. Registration No., instructions for use, and information pertinent to the work accomplished. It is very important that the form be used as directed, and that it remain with the vehicle until the vehicle is removed from service.

b. Instructions for Use. Personnel performing modifications or major unit assembly replacements must record clearly on the form a description of the work completed, and must initial the form in the columns provided. When each modification is completed, record the date, hours and/or mileage, and MWO number. When major unit assemblies such as engines, transmissions, transfer cases, are replaced, record the date, hours and/or mileage and nomenclature of the unit

assembly. Minor repairs and minor parts and accessory replacements need not be recorded.

c. **Early Modifications.** Upon receipt by a third or fourth echelon repair facility of a vehicle for modification or repair, maintenance personnel will record the MWO numbers of modifications applied prior to the date of A.G.O. Form No. 478.

CHAPTER 2

DESCRIPTION

4. DESCRIPTION.

a. General.

(1) MJT7A302 (figs. 1 and 2). This magneto is a 7-cylinder, 4-pole, flange-mounted, polar-inductor type. Rotation is clockwise when facing the drive end. The time of ignition is advanced or retarded by an automatic, flyweight-advance governor driven directly through a splined drive coupling. The magneto inductor rotor is connected with the splined center of the governor-advance hub, and is driven at

RA PD 39683

Figure 1—American Bosch Magneto—MJT7A302

seven-eighths engine speed. The seven-lobe compensating cam on the distributor shaft is driven through a set of gears at one-half engine speed by the inductor rotor. The magneto weighs 18¾ pounds, complete with radio shield.

(2) MJT9A304, MJT9A306 (figs. 3 and 4). These magnetos are 9-cylinder, 4-pole, flange-mounted, polar-inductor types. Rotation is clockwise when facing the drive end. The time of ignition is auto-

DESCRIPTION

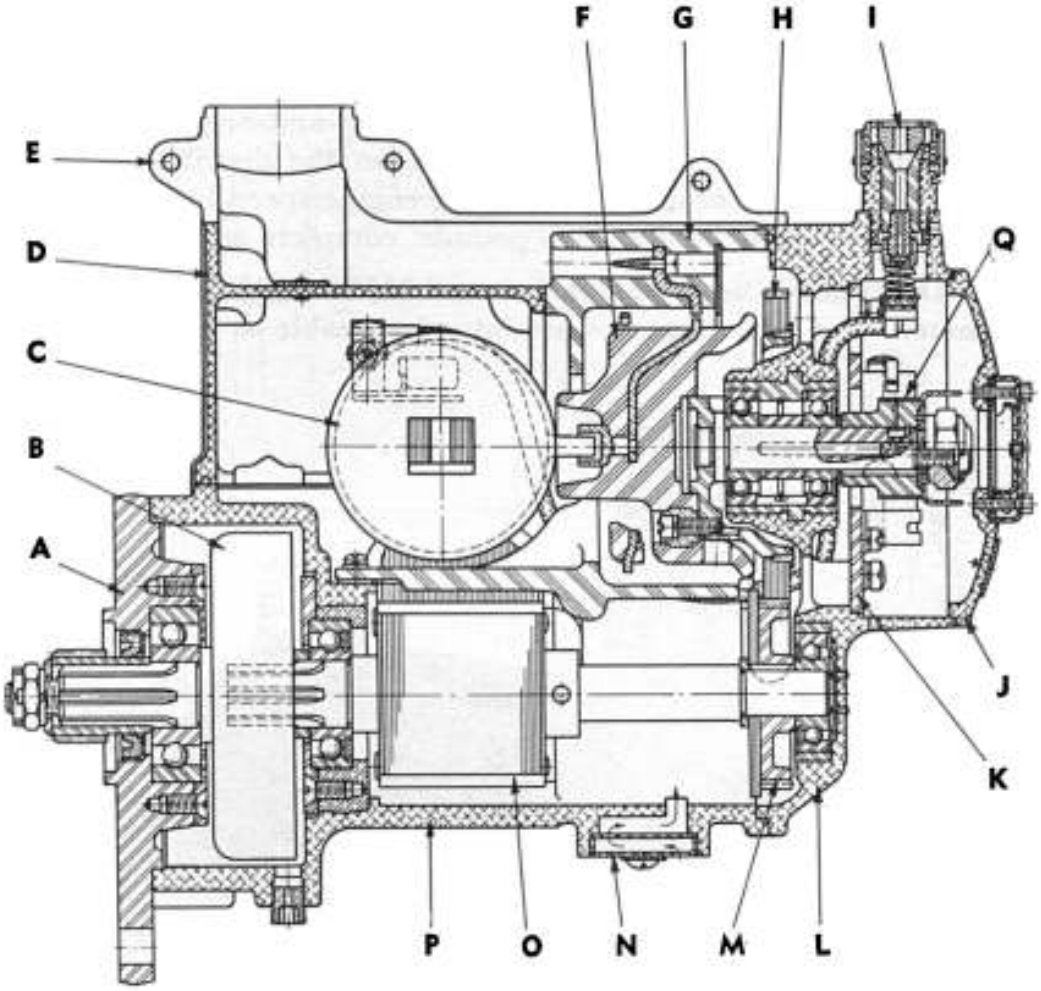

A —FLANGE
B —GOVERNOR ASSY
C —COIL ASSY.
D —DUST COVER ASSY.
E —RADIO SHIELD ASS'Y.
F —DISTRIBUTOR ROTOR
G —DISTRIBUTOR BLOCK ASS'Y
H —DISTRIBUTOR GEAR ASS'Y
I —LOW TENSION TERMINAL
J —BREAKER COVER ASS'Y
K —BREAKER ASS'Y.
L —GEAR HOUSING ASS'Y.
M —DRIVE GEAR
N —VENTILATING COVER
O —INDUCTOR ROTOR
P —MAGNETO HOUSING ASS'Y.
Q —COMPENSATING CAM

FIGURE

RA PD 336810

Figure 2—Cross-section of American Bosch Magneto—MJT7A302

matically advanced, or retarded, by an automatic spark-advance governor assembly driven directly through a splined drive coupling. The magneto inductor rotor is connected by a splined shaft to the governor-advance hub, and is driven at one-and-one-eighth engine speed. The nine-lobe compensating cam on the distributor shaft is driven through a set of gears at one-half engine speed by the inductor rotor. The magneto weighs 19½ pounds, complete with radio shield.

b. Distinguishing Characteristics of MJT9A304 and MJT9A306 Magnetos. The two magnetos are interchangeable as units, but differ

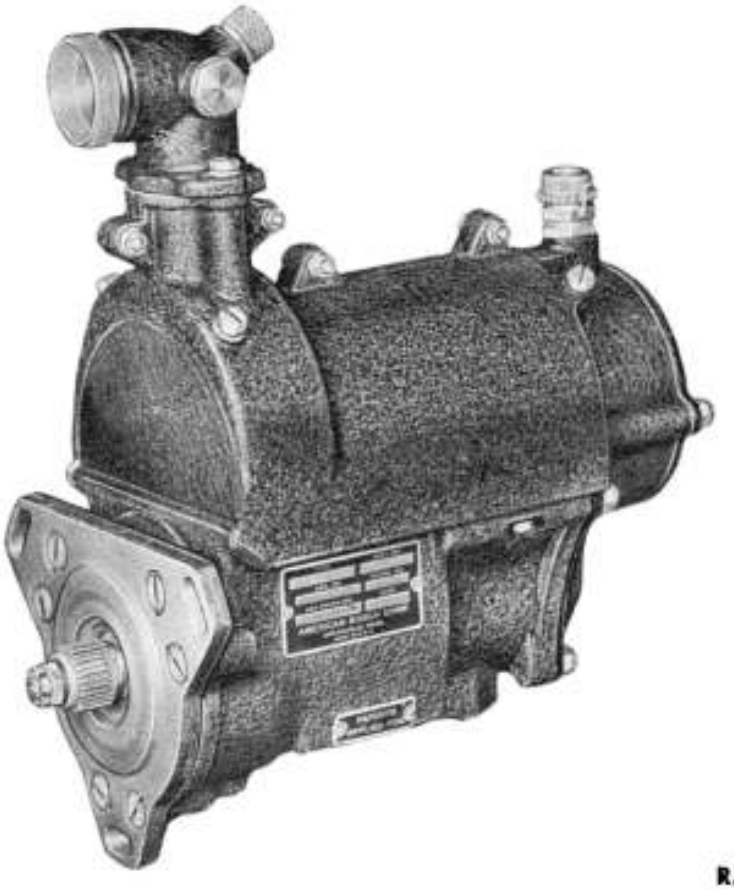

RA PD 39570

Figure 3—American Bosch Magneto—MJT9A304

in the method of fastening the mounting flange to the magneto housing. On the MJT9A304 magneto, the flange is fastened to the housing by slotted flat-head screws, staked in place. On the MJT9A306 magneto, the flange is fastened by recessed-head screws. This necessitates a slight change in the flange and housing.

c. Magneto Housing Assembly (fig. 5). The magneto housing is die-cast aluminum alloy. Facing the drive end, the inductor rotor is located toward the rear of the housing and the governor assembly is directly in front of the inductor rotor. A steel mounting flange is